VOL 4 NO 4
AINA NEWSLETTER
Winter 1978

The Penobscot Expedition, 1977

Officially AINA's fifth annual field school, and the third excavation season at the wreck site of the privateer *Defence* in Penobscot Bay, Maine, began on Friday, June 17, with the arrival of ten field school students. Actually, preparations for the work slated for the summer had been under way since the previous Sunday. It began in Augusta when Maine State Museum conservators Steve Brooke and Ken Morris and I loaded winter-stored diving, excavation, and conservation equipment into a large van, a pick-up truck, and a trailer.

Within hours of our arrival at Maine Maritime Academy in Castine later that afternoon, expedition staff members also arrived, including excavation team leaders Cynthia Orr and Jon Blumenfeld, dive master Warren Riess, and recorder Avery Stone.

Thanks to the efforts of the associate director Dave Wyman and Dr. Verge Forbes, director of the Academy Summer Session, living, laboratory, and logistical support facilities at the Academy were ready for our use.

The next morning we headed across Penobscot Bay to Stockton Harbor and the wreck site. The wreck was located on the first pass and was buoyed; two 20′ x 40′ work floats were positioned next to one another over the wreck, providing a larger working area on the surface than we had enjoyed in previous seasons.

We were off to a flying start when the field school students arrived on Friday afternoon and evening. Organized into two teams, the students underwent checkout dives, supervised by Warren, Cynthia, and Jon. Cynthia and Jon oriented their teams to the wreck and the areas where they would be excavating. While the grid frame was being readied for re-emplacement, airlifts were tried out, missing frame number tags were replaced, and preparations for lowering the grid were carried out.

Fig. 1. Objects related to the ship's galley, clockwise from right: ceramic mug, pewter spoon, wooden bowl and spoon, and mess kid. (Credit: Maine State Museum)

Excavation plans called for a two-team approach and the concurrent operation of two airlifts, one in the forward area, and the other in the cookstove-gallery area. To encompass the areas to be excavated, additional sections were added to the old grid frame, increasing its area to 25 feet square.

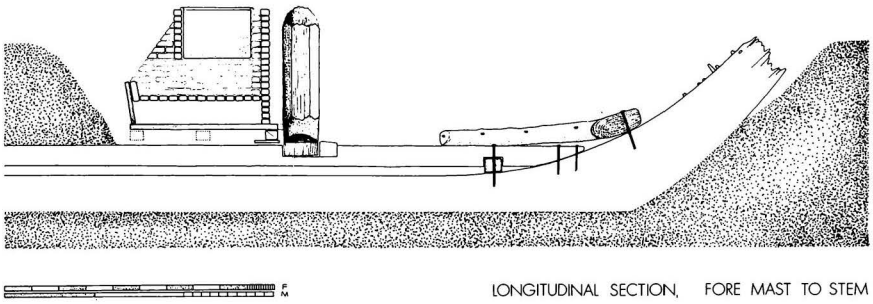

Fig. 2. Longitudinal section of the ship's hull from stempost to aft of the cookstove (Credit: Peter Hentschel)

By the end of the week, the grid was positioned and leveled to provide a datum plane, Cynthia's "A" team was airlifting in the bow, and Jon's "B" team was working near the stove. Expedition photographer Phil Voss was on hand, trying out a new dual strobe light arrangement which hopefully would penetrate the prevailing murky conditions under water and enable him to surpass his successful photographic effort of the previous field season.

By the beginning of the next week, Museum conservator Ken Morris and his assistant Betty Seifert had plenty of work, as the number of finds increased. Following modified registration procedures and holding practices initiated in 1976, Ken and Betty spent each day at the site and continued their work well into the evening at their laboratory in Castine.

Efforts of the "A" team in the bow area revealed assemblages of barrel parts as well as random staves, tops and bottoms, and split sapling or withy bands that once served as hoops. Beneath the barrel remains that had once contained stores and provisions for the crew of the *Defence* were 25-inch-long billets of split oak and birch. The disposition of the billets, which were of the same length as the barrel staves, confirmed their use as dunnage, to support the barrels above the bilge.

Also revealed in the bow area was a significant structural member, the breasthook. Butting up against the stem with its arms extended aft eight feet along each side of the lower bow, the wish-bone shaped breasthook was shaped from the natural crotch of an oak tree. Final clearance of the bow was an arduous task necessitating the removal of large ballast stones and raising to the surface scores of buckets of pebbles.

Once cleared of finds and overburden, the bow area from the stempost to the north face of the cookstove became the scene of much measuring, drawing, and photography. Section measurements, essential to the refinement of the site plan, were obtained by Dave Wyman and worked up into drawings by him (see his report, "Design and Construction of the *Defence*" which follows). Peter Hentschel refined and extended the bow perspective drawings begun in 1976 and, along with Dave, worked on a plan view of the bow area. When visibility permitted, Phil Voss photographed the breasthook and stempost and was able to transform the series into photomosaics.

Meanwhile, the work of the "B" team progressed in the galley area. Clues concerning the construction of the brick cookstove were revealed upon the removal of vertical pine facing boards. At the base of the boards "toenails" had been driven from the inside, indicating that the boards had been erected before the bricks were laid. The facing, in fact, apparently served as batter boards against which rubble and mortar were slapped prior to the laying of regular courses of bricks.

Airlift excavation continued on the west or port side. Here, in what became known as the "gold mine," many galley-related objects were recovered: a small wooden bowl, a large flat wooden tray or tencher, an intact pint-sized mug, pewter spoons, and a large wooden mortar carved out of an oak log. Also found were parts of wooden mess kids or buckets, one of which was recovered intact with the short staves still secured to the bottom by withy bands. On the bottoms of the kids, as well as on the bowl, spoons and the mug, initials had been carved. To date, a total of thirteen different two- and three-letter sets of such graffiti have been recorded. One member of the complement of the *Defence* seems to have had a sense of history, for inscribed on the base of his mess bucket is the date 1779!

Of all the galley finds, the most interesting and problematical are a number of small whittled tags, each bearing either initials or X's. Some of the tags have been whittled in the shape of arrow heads. The function of the tags remains a mystery.

While the "B" team excavated in the gold mine and sandbagged the stove, the "A" team was at work at the mainmast,

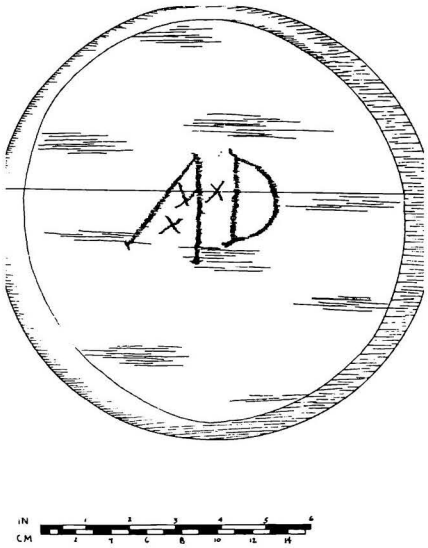

Fig. 3. Bottom of mess kid with its owner's initials, A.D., carved on it. (Credit: Helen Hillhouse Townsend)

excavating an athwartship trench. The purpose of the trench was twofold: to provide an opportunity to examine the grapeshot bin or shot locker and the bilge pump assembly; and to enable the recording of another cross-section of the hull.

The athwartship trench was not completely excavated, but enough overburden and ballast were removed to enable the completion of a hull profile measurement, as well as partial measurements of the structure of the shot locker and bilge pump box.

During the last week of the field season, excavation slowed down, and covering the exposed structure became the foremost consideration. To avoid the problems encountered during the 1976 season, a number of alternative modes was instituted. In addition to sand bag protection of the stove, shot locker, and bilge assembly, exposed hull structure was sheathed with 24" x 40" polyethylene, held in place with Monel staples. Further protection of the bow area was provided through backfilling with beach sand dredged from nearby Sears Island.

This operation was carried out by Maine Maritime Academy students enrolled in a summer ocean engineering laboratory. A hopper mounted on an outboard-driven catamaran was filled with sand by means of a water dredge. The craft, dubbed the "Sand Slinger," was then positioned over the bow area of the *Defence,* and the sand was emptied into the excavated area, where divers spread it around over the polyethylene-sheathed ceiling planking.

A visit to the site by naval architect and maritime historian William Avery Baker prompted the raising of a structural assemblage, identified as a section of the port bow, including the knighthead, outside planking, and a hawse hole. Frame remnants attached to the planking corresponded to frame timbers on the port bow of the imbedded hull remains. The port bow section provides one more important piece of evidence related to the construction of the *Defence.*

A significant aspect of the summer's work was carried out in Castine. Dick Steffy, AINA Ship Reconstructor, added an important dimension to his lectures on ship construction. Employing measurements supplied by Dave Wyman and Peter Hentschel, as well as his research and experience, Dick constructed a half model and a frame model of the *Defence.* The models served as teaching aids, and the frame model was particularly helpful as a supplement to the site plan and drawings of structural elements of the wreck. While Dick sawed, carved, and glued, Helen Hillhouse Townsend, a 1976 field school student, worked on artifact drawings, completing more than thirty drawings and providing field school students with basic instruction in drawing techniques.

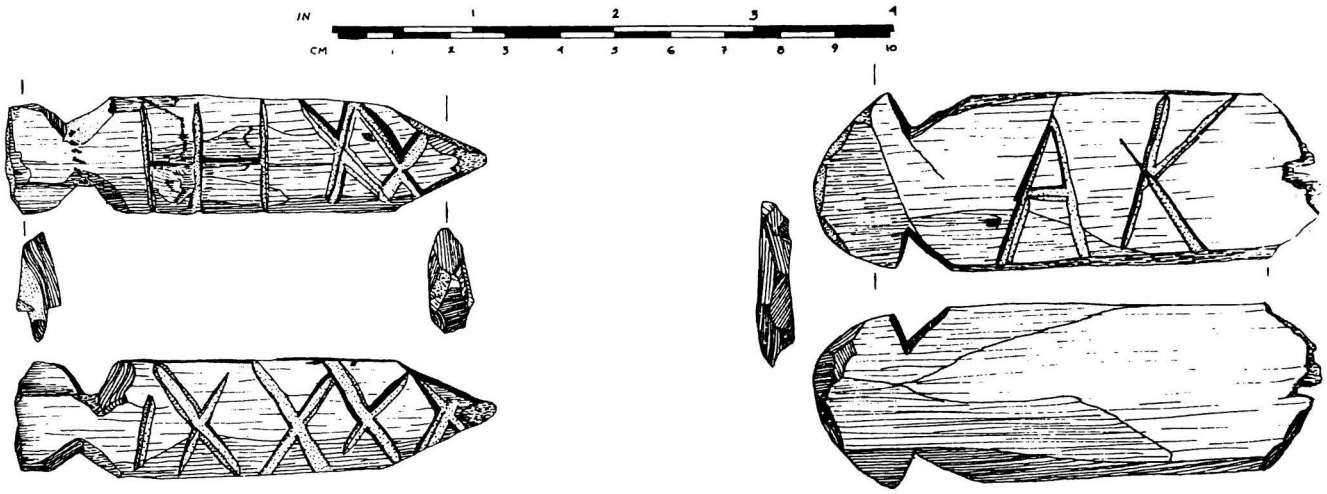

Fig. 4. Carved and initialed tags recovered from the galley area. (Credit: Helen Hillhouse Townsend)

Other aspects of field school instruction included a series of lectures on conservation, given by Ken Morris and Steve Brook. William Avery Baker talked with the students about vessel design techniques dating from the 15th through the 18th century. Warren Riess conducted an advanced NAUI course. One day off we journeyed to the Bath Marine Museum, stopping enroute at Thomaston

to see a two-masted schooner under construction. Dr. Barbara Liggett of Rutgers University, an historical archaeologist with eighteenth century interests, spent two days at the site, assisting in artifact interpretation and providing many useful comments and suggestions.

For archaeology and for the field school, it was a productive season. The fact that an excess of 450 underwater hours was logged—as many as eighteen in one day—says much about the effort expended by all involved. Each year, Dave Wyman and I have marveled at the spirit, energy, and diligence of the field school students. 1977 was no exception.

It is my pleasure to conclude with acknowledgements. As in previous seasons, logistical and technical support provided by Maine Maritime Academy plus other contributions to the project deserve special mention. The same is true of the Maine State Museum, which provided financial assistance, equipment, and the services of full-time conservators. Funding came from the National Geographic Society and the Texas A & M Research Foundation. The hard-working field school students were Sheila Matthews, Sam Margolin, and Dick Swete, all graduate students in the nautical archaeology program at Texas A & M University; Dan Bartley from the University of Texas at Austin; Shelley Lang, a recent graduate of Brooklyn College; Bill Justiss, a doctoral student from the University of Arkansas; Paul Hundley, a recent graduate of the University of Minnesota; Wendy Feuer, a graduate student at the University of North Carolina; and Nancy Orton, a graduate student at the University of Pennsylvania.

—David C. Switzer

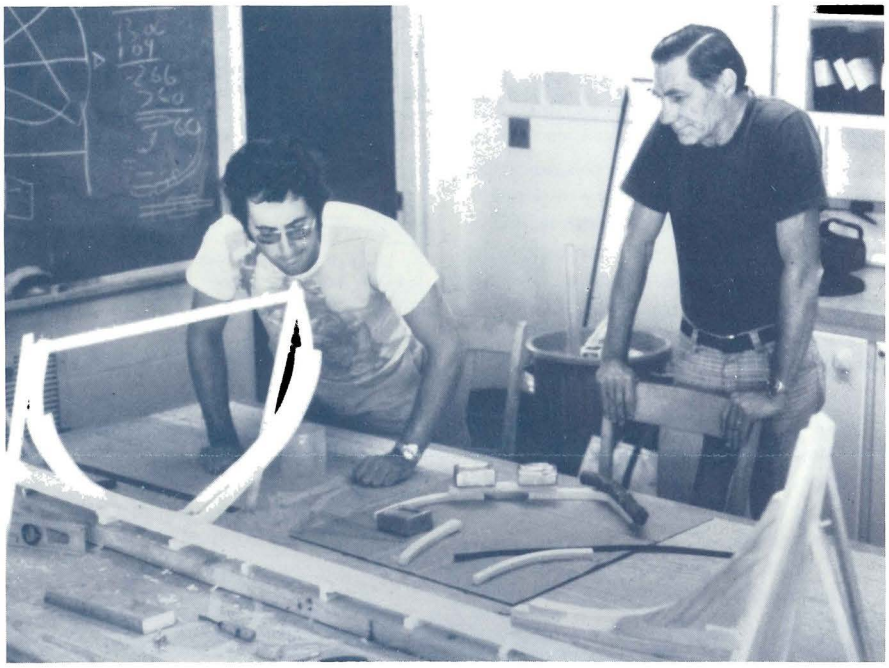

Fig. 5. Warren Riess (left) examines frame model of the Defence under construction by Richard Steffy (right). (Credit: Sheila Matthews)

Ninth Conference on Underwater Archaeology

AINA and Texas A & M University were well represented at the Ninth Conference on Underwater Archaeology, held this year in San Antonio, Texas, between January 3rd and 9th, by a number of papers: AINA Adjunct Professor **Carolyn G. Koehler** (University of Tennessee), "Evidence around the Mediterranean for Corinthian Export of Wine and Oil;" **George F. Bass,** "An Eleventh-Centry Islamic Glass Wreck at Serce Liman;" **Donald H. Keith,** "Excavation of a Third-Century B.C. Shipwreck at Lipari, Italy: A Pioneer Application of Saturation Diving Techniques in Nautical Archaeology;" Adjunct Professor **David C. Switzer** (Plymouth State College), "Provision Storage and Galley Facilities Aboard an 18th Century Privateer;" Texas A & M University student **Lisa Shuey,** "Underwater Survey and Excavation at the Ancient Port of Graviscae, Italy;" **J. Richard Steffy,** "A Closer Look at the Construction Details—Brown's Ferry Wreck," with Alan Albright of the University of South Carolina, and "Maximum Knowledge from Minimum Remains," a talk on how much can be learned from the most fragmentary wooden hull remains. In addition, Texas A & M student **Sam Margolin** read Hamo Sassoon's paper on the Mombasa excavation AINA conducts with the National Museums of Kenya; and **John D. Broadwater,** in "A Report on York River Fleet Shipwreck Archaeological Project, Yorktown, Virginia," discussed AINA's 1976 campaign on the Cornwallis Cave wreck.

The tenth conference is expected to be held in Nashville, Tennessee, in 1979.

Design and Construction of the Defence

In addition to artifacts related to life and work at sea during the eighteenth century, the *Defence* is yielding important information related to the design and construction of wooden vessels built in America during the era of the Revolution. The *Defence* is unique in that she is the only privateer of the period in existence. Important as well is the fact that approximately fifty percent of the hull structure has been preserved in the muddy bottom of Stockton Harbor. Already we have recorded many structural details, and at the conclusion of hull excavations we hope to have accumulated enough information to complete a set of "as built" plans.

The section taken at port-starboard frame 10 (Fig. 6) is representative of information gained to date. At this location in the forward portion of the vessel was revealed the only double futtock frame complete with a floor timber. The other frames in this area are half frames, suggesting that the builder erected random single frames between widely spaced double futtock frames.

This section also shows the keelson, frames, breasthook, ceiling planking, and a deck beam. Square quarter-inch iron nails secured ceiling planks to frames, and iron drift bolts and wooden treenails were employed to fasten structural members together. In 1976, the deck beam was found buried within the wreck where it had fallen during wreck formation. In 1977, its original position against port frame 10 was determined by aligning bolt holes preserved in both members. The location of the beam enables us to establish the height of the main deck above the keelson. The lodge knee and intermediate deck beam (shown in plan in Fig. 7) add further to our understanding of the deck construction.

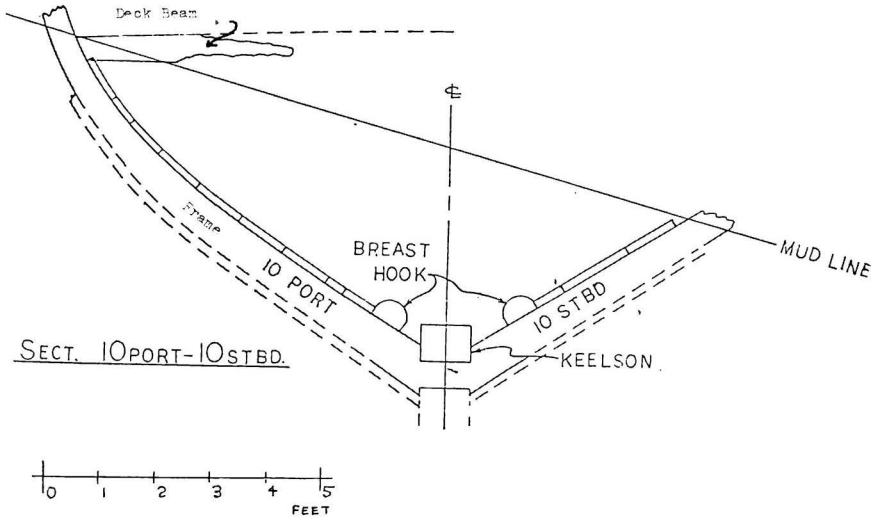

Fig. 6. Section of the Defence's hull taken at Frame 10, approximately eight feet aft of the stem. (Credit: David Wyman)

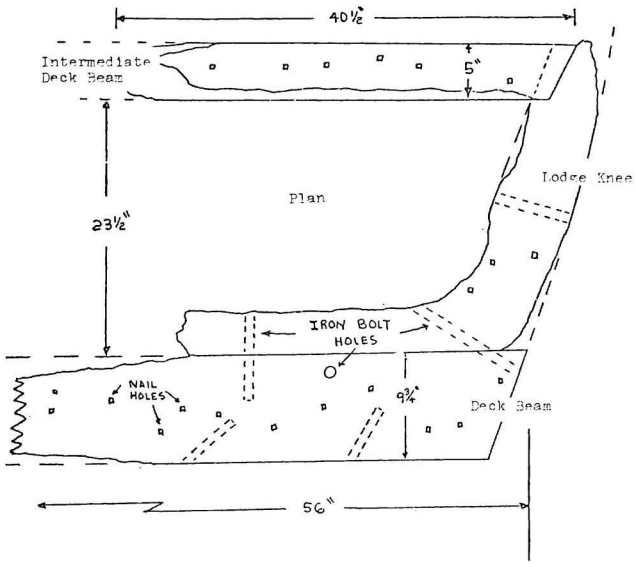

Fig. 7. Detail of the deck beam and knee assemblage at Frame 10. (Credit: David Wyman)

During the next phase of excavation more sections will be measured and recorded along with other structural details. Eventually we hope to assemble a complete set of plans of the existing hull structure. From these plans a replica of the *Defence* can be built. The construction of a replica will be the ultimate step toward understanding design and construction techniques employed in a private New England shipyard.

—David B. Wyman

AMERICAN INSTITUTE OF NAUTICAL ARCHAEOLOGY

P.O. Drawer AU
College Station, Texas 77840

The American Institute of Nautical Archaeology is a nonprofit scientific/educational organization whose purpose is to gather knowledge of man's past as left in the physical remains of his maritime activities and to disseminate this knowledge through scientific and popular publications, seminars, and lectures. The AINA Newsletter is published periodically by AINA and is distributed to its members and Supporting Institutions to inform them of AINA's current activities. AINA is an equal opportunity organization.

American Institute of Nautical Archaeology
P.O. Drawer AU
College Station, Texas 77840

Non-profit Organization
U.S. Postage
PAID
Permit No. 19
College Station, Texas